Actisense®

Award Winning NMEA Specialists

NMEA 2000 to PC Gateway NGT-1

Quick Start Guide

Issue 1.00

Actisense®
Active Research Ltd
21 Harwell Road
Poole
Dorset
UK, BH17 0GE

Tel: +44 (0)1202 746682
Email: **support@actisense.com**
Web: **www.actisense.com**

Important Notices

The device to which this manual relates complies with the Electromagnetic Compatibility requirements according to EN60945. The unit should always be used in conjunction with appropriately approved, shielded cable and connectors as per NMEA 0400 to ensure compliance. A declaration of conformity is available for download at www.actisense.com.

If the device to which this manual relates is to be installed within five metres of a compass, please refer to the 'Compass Safe Distance' section in the 'Technical Specifications' table available on the Actisense website.

Trademarks and Registered Trademarks

Actisense® and the Actisense logo are registered trademarks of Active Research Limited (Ltd). All other trademarks are the property of their respective owners.

The NMEA® name and NMEA logo are copyright held by the NMEA. All uses in this manual are by permission and no claim on the right to the NMEA name or logo are made in this manual.

Fair Use Statement

The contents of this manual may not be transferred or copied without the express written permission of Active Research Ltd.

Copyright © 2017 Active Research Ltd. All rights reserved.

Product Registration

Please register your product via the online form at http://actisense.com/support/prodreg.html.

Your product package includes a unit serial number. The serial number is six digits long and can be found below the barcode on the label. Your registration will assist Actisense Support to link your product to your details, simplifying any future assistance you may require.

Product Disposal

Please dispose of this product in accordance with the WEEE Directive. The product should be taken to a registered establishment for the disposal of electronic equipment.

Technical Accuracy

To the best of our knowledge the information contained in this document was correct at the time it was produced. Active Research Ltd cannot accept liability for any inaccuracies or omissions.

The products described in this manual and the specifications thereof may be changed without prior notice. Active Research Ltd cannot accept any liability for differences between the product and this document. To check for updated information and specifications please check actisense.com.

Active Research Ltd will not be liable for infringement of copyright, industrial property rights, or other rights of a third party caused by the use of information or drawings described in this manual.

Product Guarantee

This product comes with a three year 'return to base' guarantee. If you suspect that the unit is faulty please refer to the Troubleshooting Section of the User Manual before contacting support.

It is a requirement of the guarantee that all installations of electronic equipment follow the NMEA 0400 specification. Any connection to a battery or power supply must meet the mandatory essential safety requirements that may be imposed by local regulatory agencies.

Actisense products are intended for use in a marine environment, primarily for below deck use. If a product is to be used in a more severe environment, such use may be considered misuse under the Active Research Ltd guarantee.

Introduction & Features

The Actisense NGT-1 makes it possible to send and receive NMEA 2000® data safely between a PC and an NMEA 2000® network. This creates the possibility of feature rich software applications replacing or complementing dedicated hardware such as a Multifunction Display (MFD) or Chart Plotter.

The freely available diagnostic software (NMEA Reader) from Actisense uses the NGT-1 to display all devices active on the network and all of the data messages flowing between them. The powerful set of tools that NMEA Reader offers the user can instil a better understanding of the network and help diagnose potential network issues.

Powering the NGT-1

ISO Variants:

All ISO variants of the NGT-1 receive their power supply when connected to a correctly powered NMEA 2000 backbone. The backbone must also be correctly terminated using NMEA 2000 approved, 120 Ohm termination resistors. Refer to the "Connecting to an NMEA 2000 Network" section for more information.

USB Variants:

All USB variants will be powered by the PC/laptop USB connection once the USB drivers have been successfully installed. Depending on the settings of the PC/laptop that the NGT-1 is connected to, the latest Actisense USB drivers will install automatically from Windows update. If this does not happen, the same USB driver files are available on the CD that is included in the box with the NGT-1 or from the NGT-1 'downloads' web page.

ISO Variant

USB Variant

Connnecting to an NMEA 2000 Network

The illustration below provides an example of the minimum requirements for an NMEA 2000 network. The horizontal cable joining the T-pieces is not always needed in reality as a backbone can be formed by simply connecting T-pieces directly to each other. The cable connecting a device to a T-piece must not exceed 6 metres as defined in the NMEA 2000 specification:

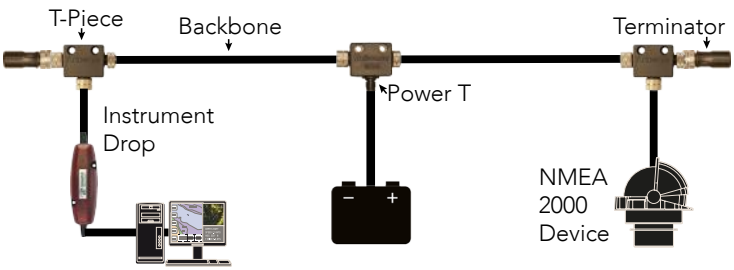

NMEA 2000 Pin Out

The diagram below illustrates the standard wiring colours used by all NMEA 2000 devices (like the NGT-1):

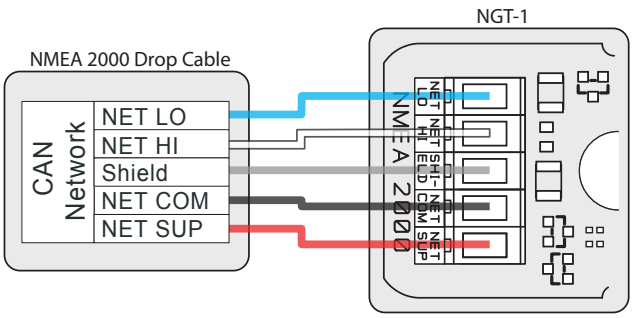

Wire Colour	NMEA 2000	PCB Label
Shield/Screen	Shield	SHIELD
Blue	Net Low	NET LO
White	Net High	NET HI
Black	Net Common	NET COM
Red	Net Supply	NET SUP

Connnecting to a SeaTalkNG Network

Raymarines SeaTalkNG network uses exactly the same data as a standard NMEA 2000 network. The only difference is the physical network connections. To connect any standard NMEA 2000 device (like the NGT-1) to an STNG network, simply use an NMEA 2000 to STNG adapter cable (product code: STNG-A06045) between the device and the STNG network.

Connnecting to a PC/laptop

The diagram below illustrates how to connect the loose wires from any ISO variant NGT-1 to a serial cable (DB9F). If the PC/laptop does not have a serial port, a USB-serial converter will also be needed.

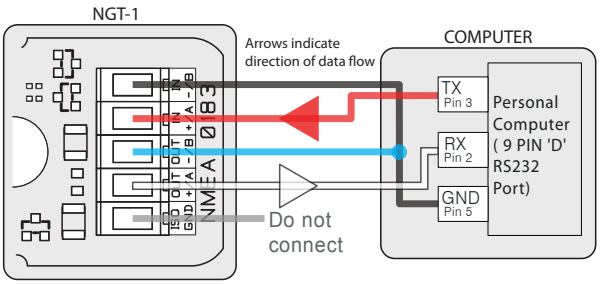

Configuring the NGT-1

The Application that is being used with the NGT-1 is responsible for configuring the NGT-1 for each session when it opens up the COM port to the NGT-1. The end user should not need to configure anything, and any manual configuration could be lost.

If the "Tx PGN Enable List" inside the NGT-1 is manually changed those changes may well be overwritten when starting up the software and it configures the NGT-1 to what it knows it needs. Furthermore, if the software in use isn't actually sending the manually enabled PGNs to the NGT-1, nothing will appear on the network. If software has been designed to transmit a PGN it should set up the NGT-1's "Tx PGN Enable List" accordingly to allow those PGNs to be transmitted on the NMEA 2000 network.

LED Behaviour

There are 2 LEDs inside the NGT-1, one on the PC/laptop side, one on the NMEA 2000 network side. On start up, these LEDs will flash alternately and very quickly for 2 seconds.

The primary function of the NGT-1 LEDs is to indicate reception of NMEA 2000 PGNs (data) and the reception of PC data. If no data is present, both LEDs will flash at the same time every 10 seconds. This could be a result of incorrect wiring or a lack of data available to the NGT-1.

If any irregular behaviour is observed, please consult the NGT-1 User Manual (available on the CD provided or via the NGT-1 'downloads' web page) or the Actisense Support Centre which can be accessed via the main menu from the Actisense website.